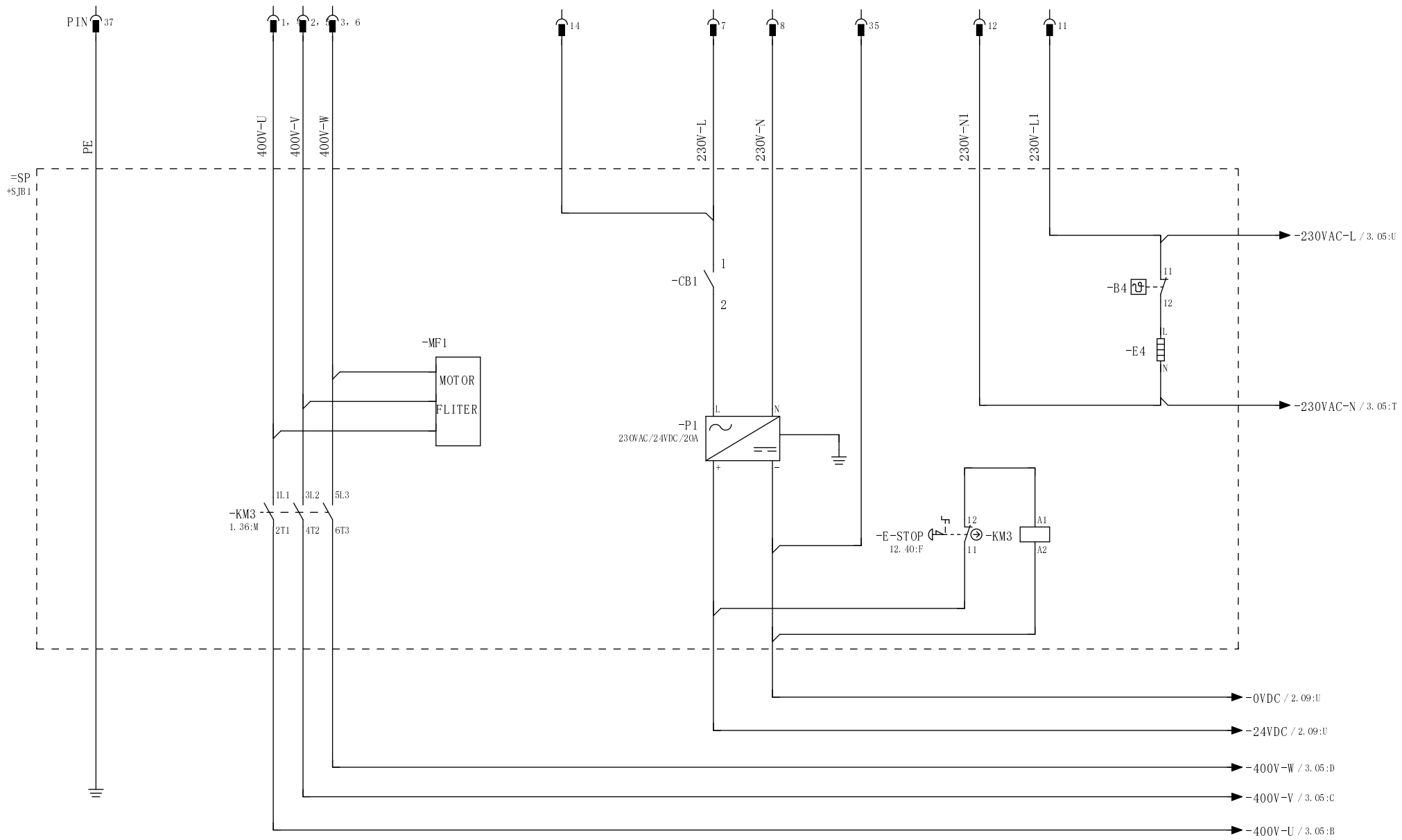

Date	Name	ISSUED BY:	DESIGN BY:	DRAW BY: NI WEIJIE	ZPMC 中国	SYSTEM TYPE ZPMC SPREADER	ORDER.NR: 1002000598 / DRAWING.NR:	ELEMENTARY DIAGRAM SPREADER CIRCUIT DIAGRAM	SP / +	SH.NO. 1 / CONT. ON. SH 2

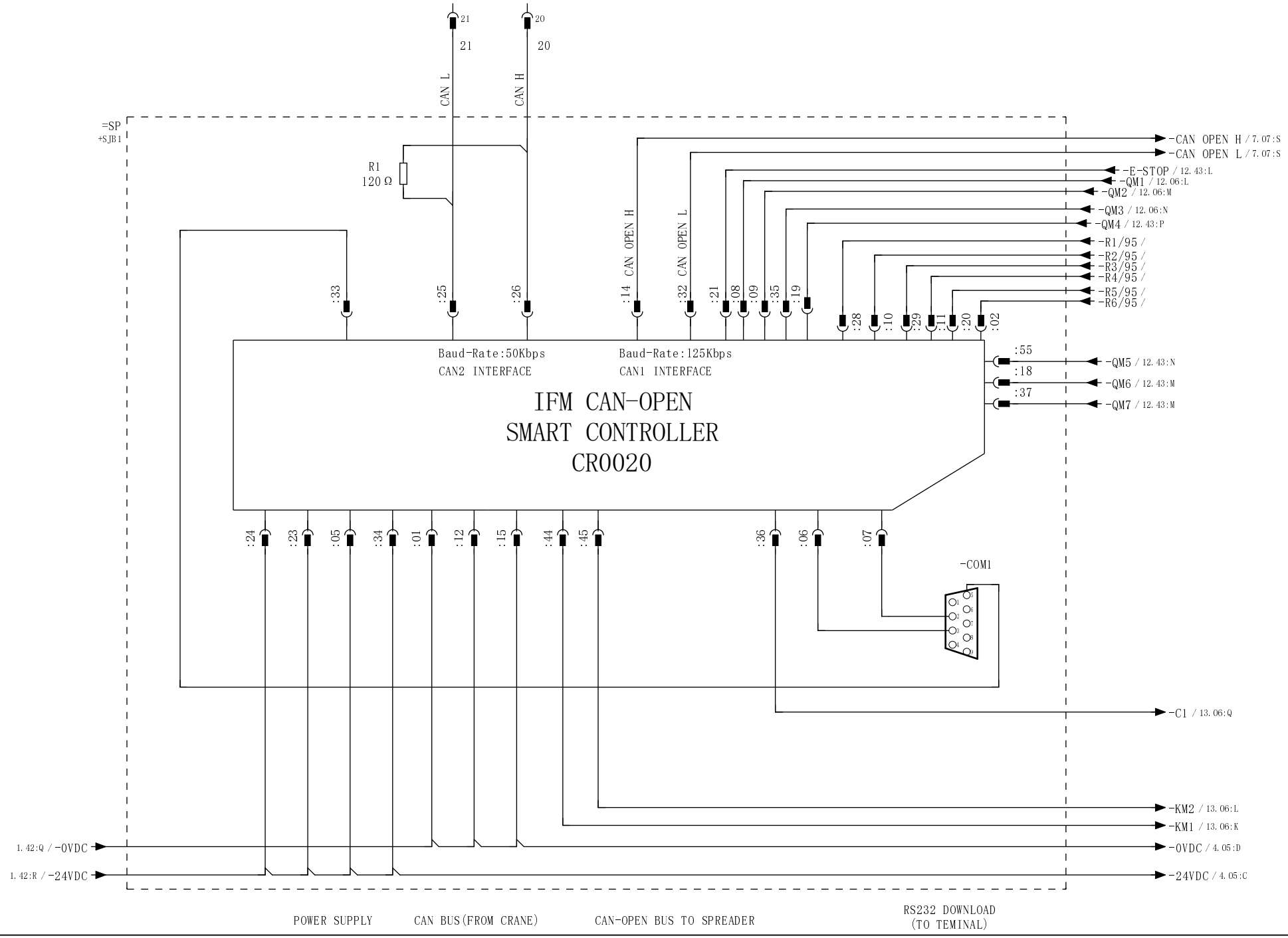

Date	Name	ISSUED BY:	DESIGN BY:	DRAW BY: NI WEIJIE	ZPMC 中国	SYSTEM TYPE ZPMC SPREADER	ORDER.NR: 1002000598 / DRAWING.NR:	ELEMENTARY DIAGRAM SPREADER CIRCUIT DIAGRAM	SP / +	SH.NO. 2 / CONT. ON. SH 3

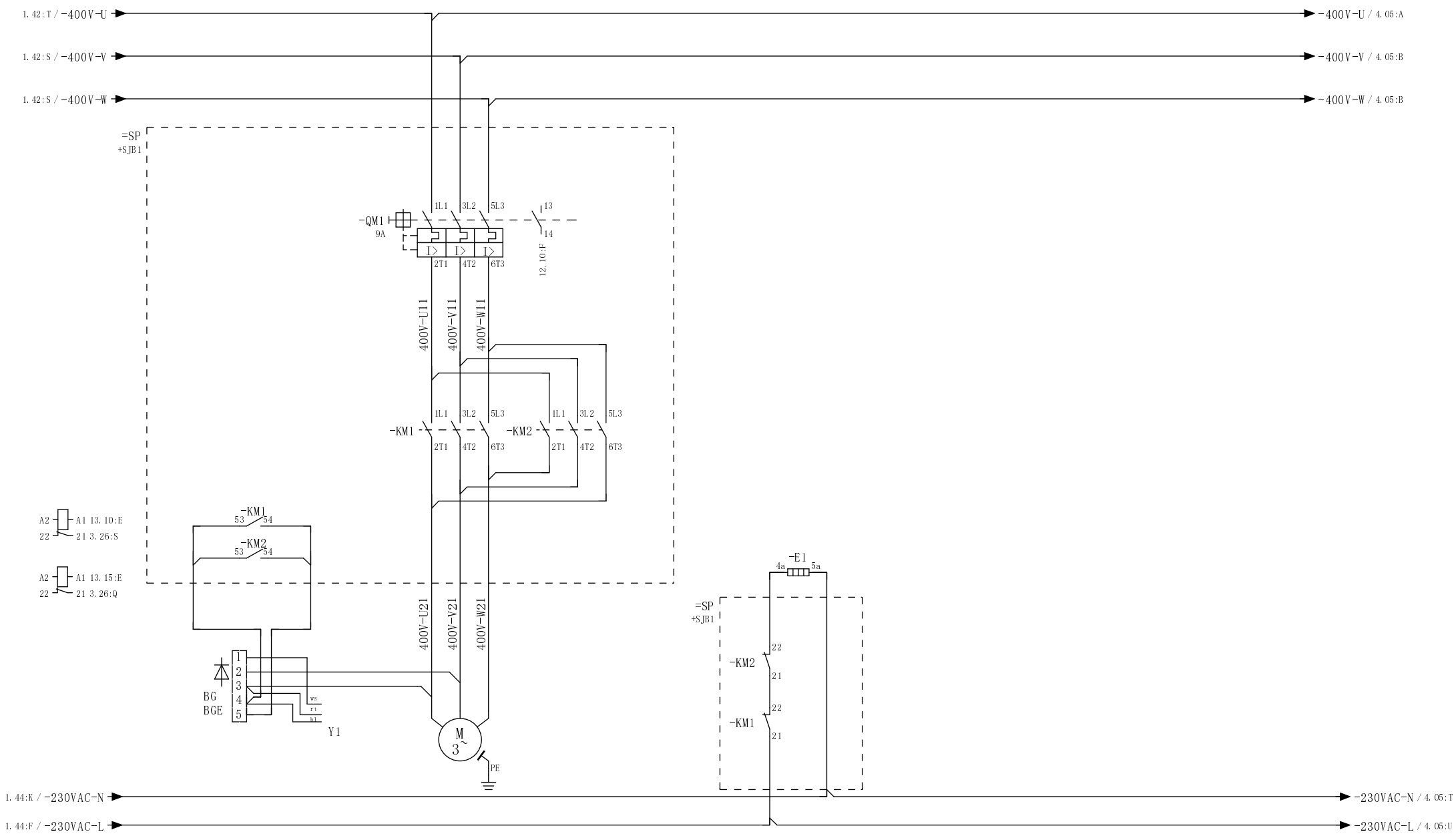

MOTOR WITH BRAKE
AND CURRENT RELAY
伸缩电机制动器Y1

TELESCOPIC MOTOR
WITH BRAKE
400VAC/50HZ 4KW
伸缩电机M1

TELESCOPIC HEATER
230VAC
伸缩电机加热器E1

Date	Name	ISSUED BY:	DESIGN BY:	DRAW BY: NI WEIJIE	ZPMC 中国	SYSTEM TYPE ZPMC SPREADER	ORDER.NR: 1002000598 / DRAWING.NR:	ELEMENTARY DIAGRAM SPREADER CIRCUIT DIAGRAM	SP / +	SH.NO. 3 / CONT.ON.SH 4

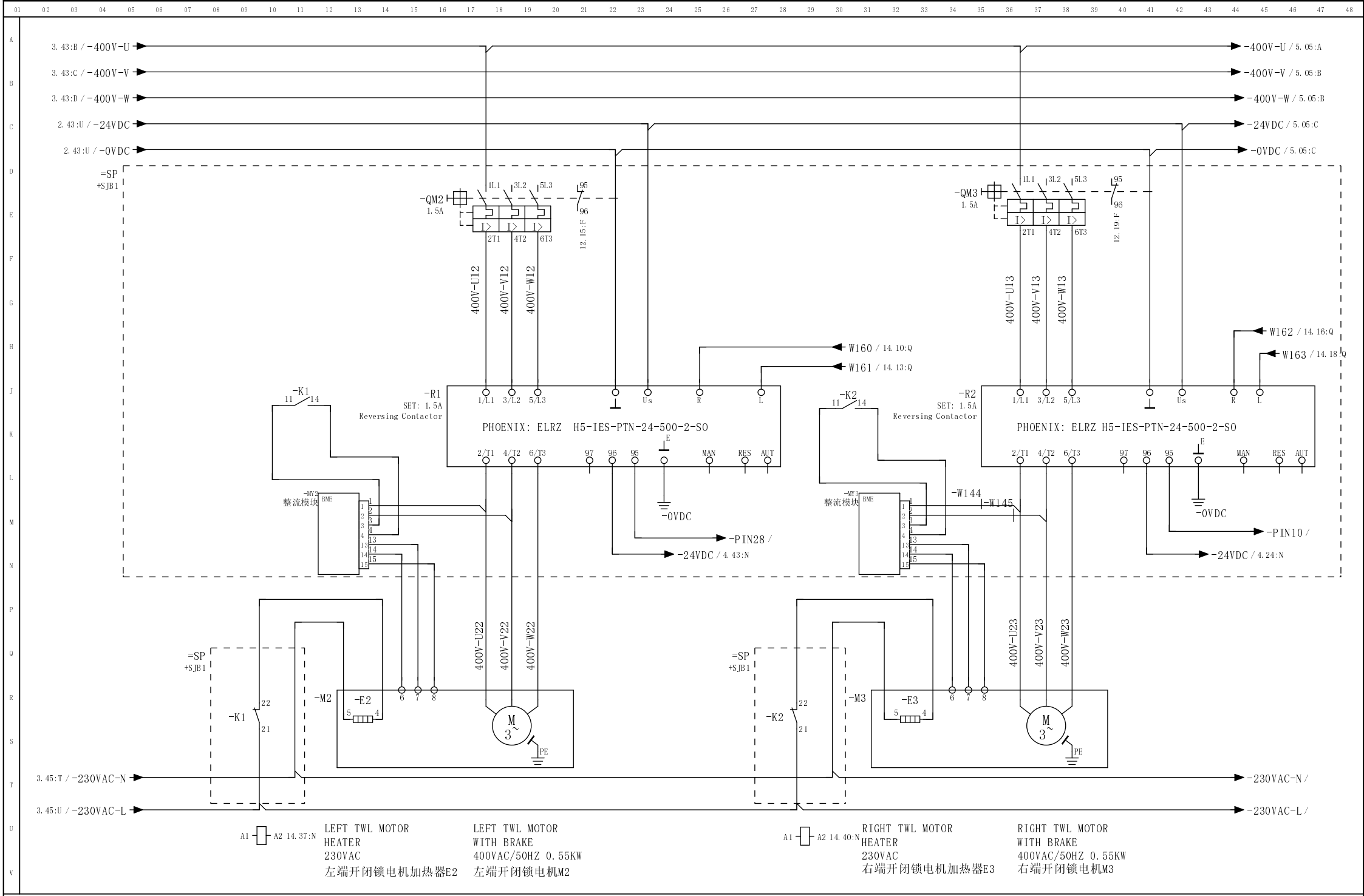

Date	Name	ISSUED BY:	DESIGN BY:	DRAW BY: NI WEIJIE	ZPMC 中国	SYSTEM TYPE ZPMC SPREADER	ORDER. NR: 1002000598	ELEMENTARY DIAGRAM
							DRAWING. NR:	SPREADER CIRCUIT DIAGRAM

SP | SH. NO. 4 | + | CONT. ON. SH 5

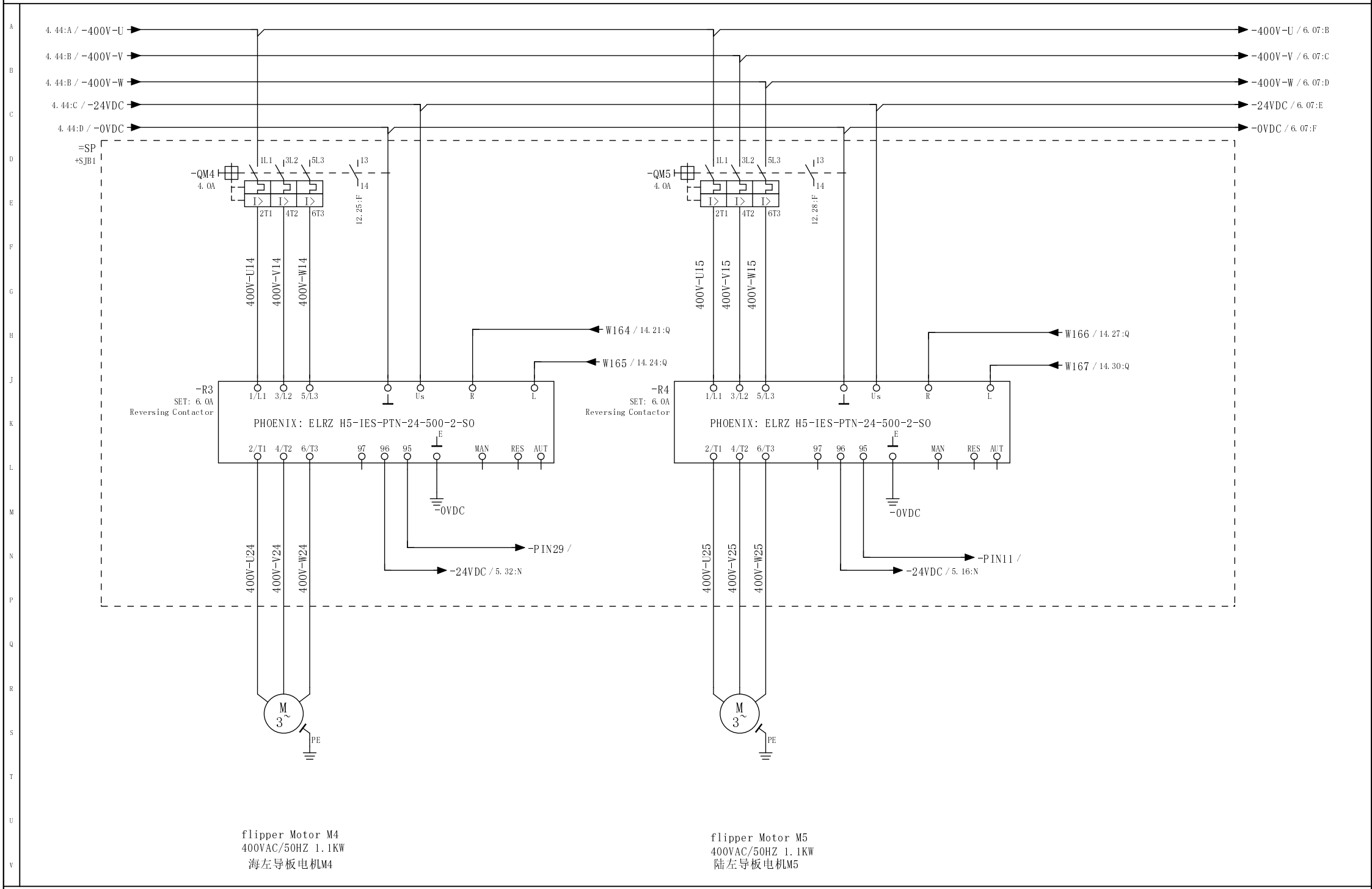

flipper Motor M4
400VAC/50HZ 1.1KW
海左导板电机M4

flipper Motor M5
400VAC/50HZ 1.1KW
陆左导板电机M5

Date	Name	ISSUED BY:	DESIGN BY:	DRAW BY: NI WEIJIE	ZPMC 中国	SYSTEM TYPE ZPMC SPREADER	ORDER.NR: 1002000598 / DRAWING.NR:	ELEMENTARY DIAGRAM SPREADER CIRCUIT DIAGRAM	SP / +	SH.NO. 5 / CONT.ON.SH 6

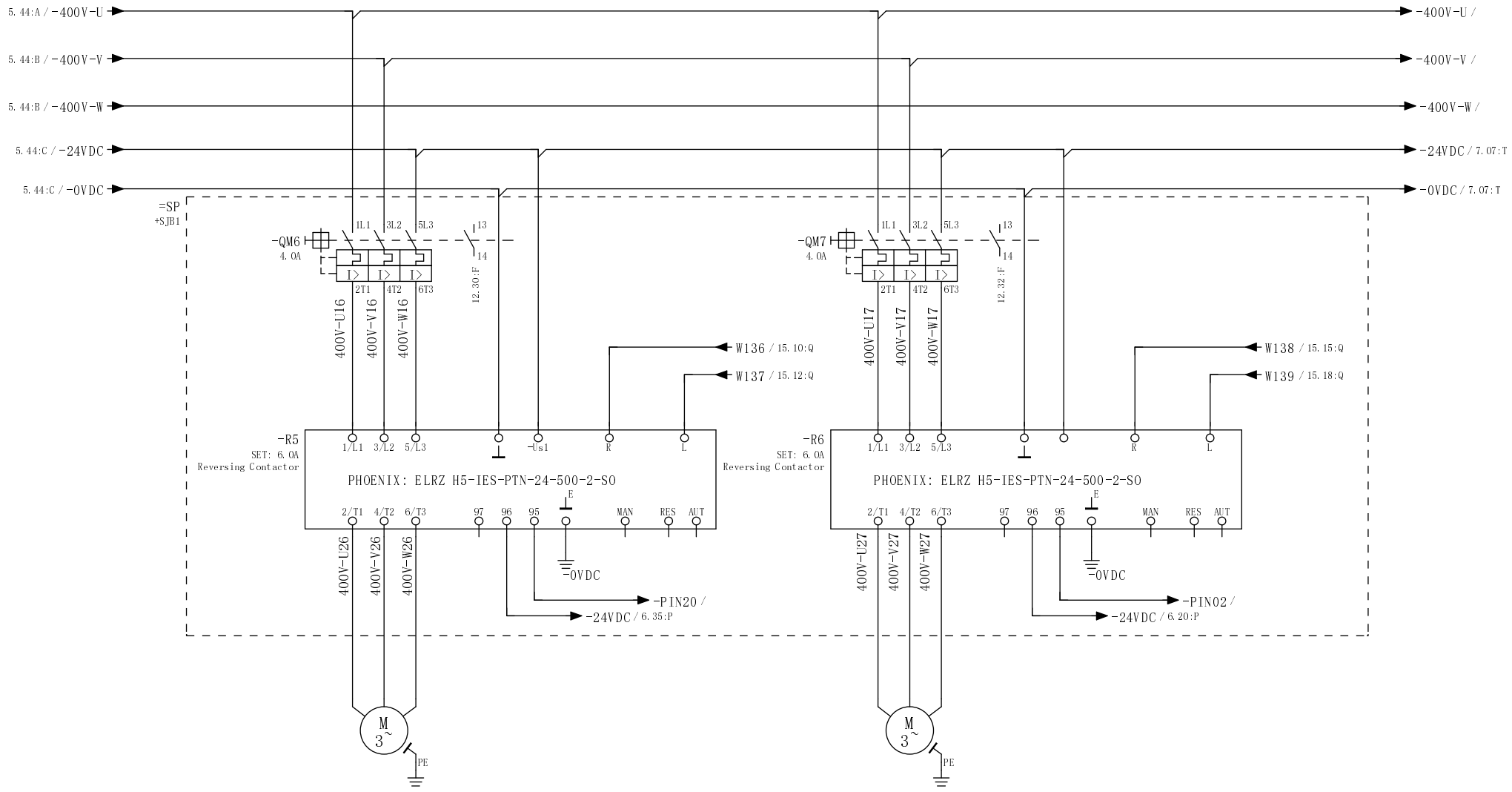

flipper Motor M6
400VAC/50HZ 1.1KW
海右导板电机M6

flipper Motor M7
400VAC/50HZ 1.1KW
陆右导板电机M7

Date	Name	ISSUED BY:	DESIGN BY:	DRAW BY: NI WEIJIE	ZPMC 中国	SYSTEM TYPE ZPMC SPREADER	ORDER. NR: 1002000598 / DRAWING. NR:	ELEMENTARY DIAGRAM SPREADER CIRCUIT DIAGRAM	SP / +	SH. NO. 6 / CONT. ON. SH 7

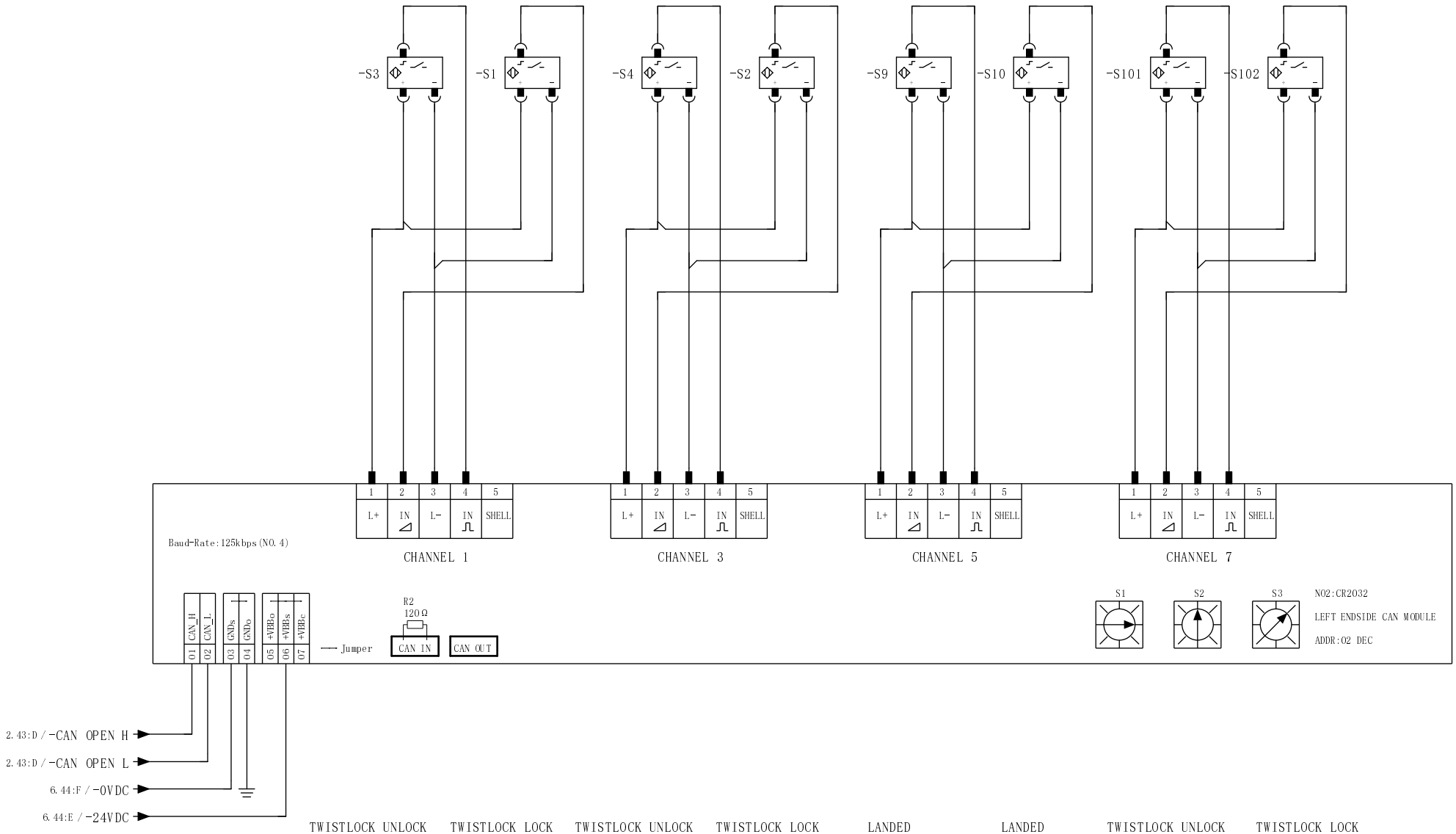

TWISTLOCK UNLOCK PRO.S ELL 陆左开锁限位 S3

TWISTLOCK LOCK PRO.S ELL 陆左闭锁限位 S1

TWISTLOCK UNLOCK PRO.S ESL 海左开锁限位 S4

TWISTLOCK LOCK PRO.S ESL 海左闭锁限位 S2

LANDED PRO.S ELL 陆左顶销限位 S9

LANDED PRO.S ESL 海左顶销限位 S10

TWISTLOCK UNLOCK PRO.S EL 左端开锁限位 S101

TWISTLOCK LOCK PRO.S EL 左端闭锁限位 S102

Date	Name	ISSUED BY:	DESIGN BY:	DRAW BY: NI WEIJIE	ZPMC 中国	SYSTEM TYPE ZPMC SPREADER	ORDER.NR: 1002000598 / DRAWING.NR:	ELEMENTARY DIAGRAM SPREADER CIRCUIT DIAGRAM	SP / +	SH.NO. 7 / CONT.ON.SH 8

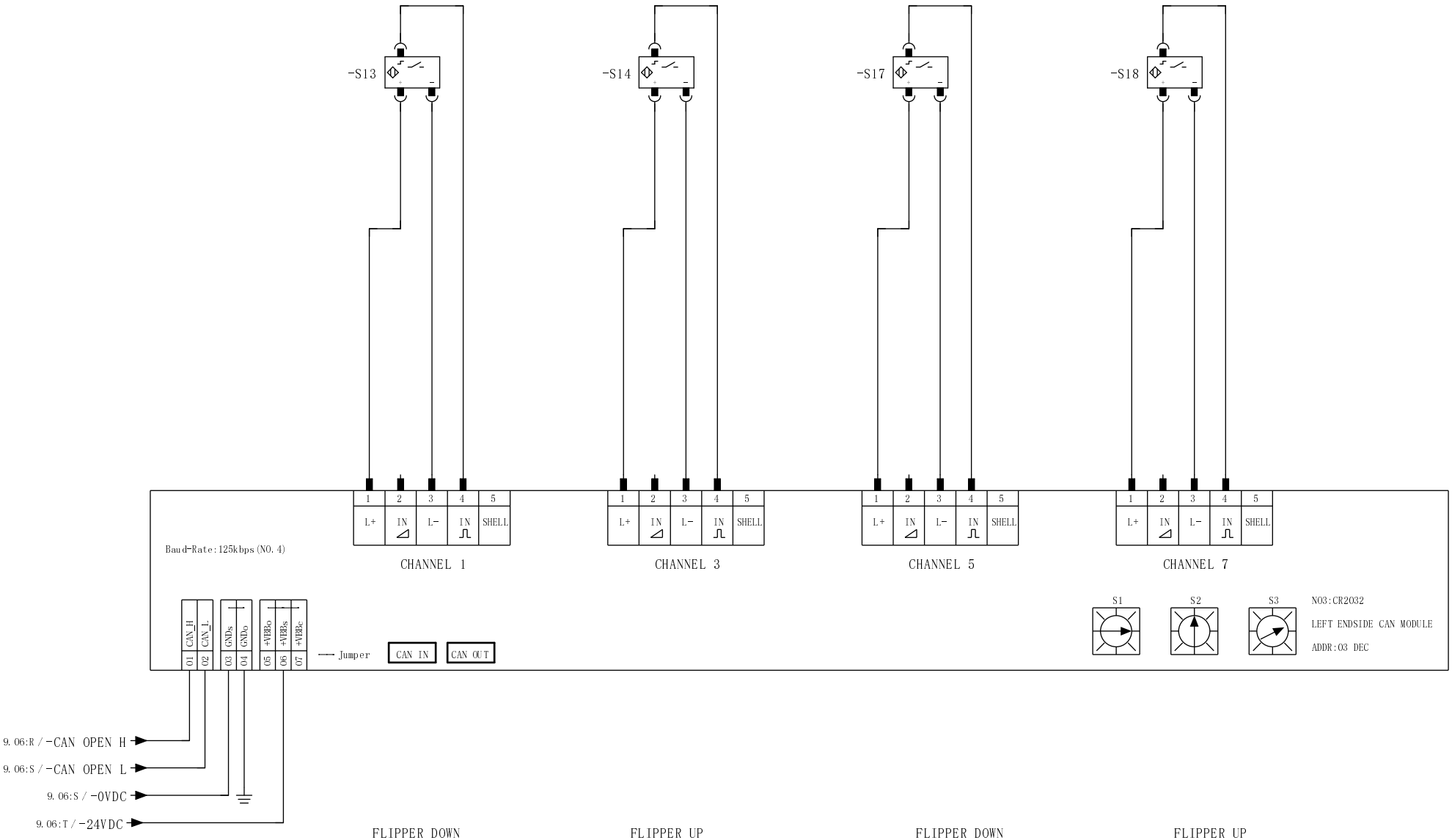

FLIPPER DOWN
PRO.S ELL
陆左侧导板下限位 S13

FLIPPER UP
PRO.S ELL
陆左侧导板上限位 S14

FLIPPER DOWN
PRO.S ESL
海左侧导板下限位 S17

FLIPPER UP
PRO.S ESL
海左侧导板上限位 S18

Date	Name	ISSUED BY:	DESIGN BY:	DRAW BY: NI WEIJIE	ZPMC 中国	SYSTEM TYPE ZPMC SPREADER	ORDER.NR: 1002000598 / DRAWING.NR:	ELEMENTARY DIAGRAM SPREADER CIRCUIT DIAGRAM	SP / +	SH.NO. 8 / CONT.ON.SH 9

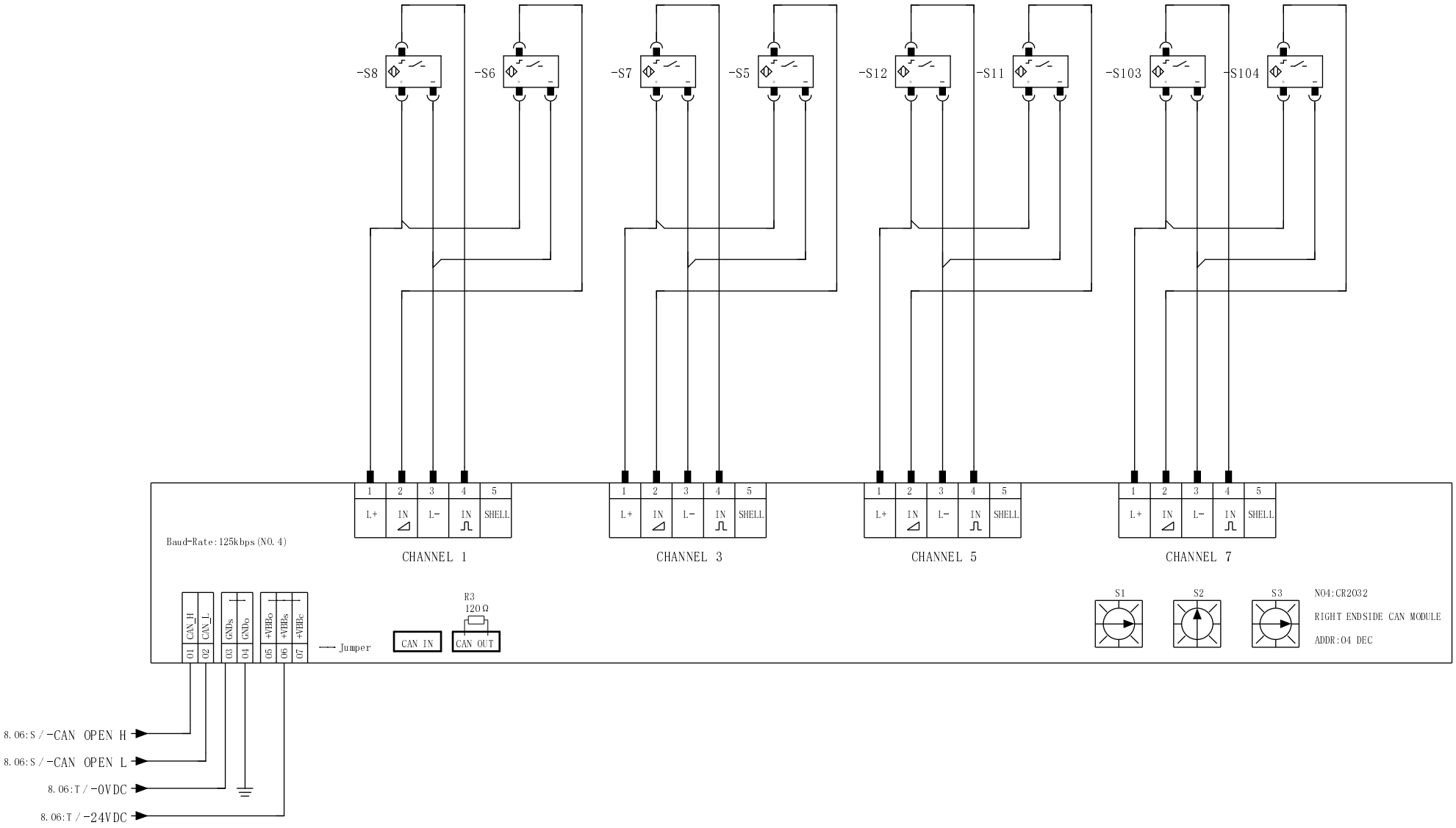

TWISTLOCK UNLOCK PRO.S ELR 陆右开锁限位 S8

TWISTLOCK LOCK PRO.S ELR 陆右闭锁限位 S6

TWISTLOCK UNLOCK PRO.S ESR 海右开锁限位 S7

TWISTLOCK LOCK PRO.S ESR 海右闭锁限位 S5

LANDED PRO.S ELR 陆右顶销限位 S12

LANDED PRO.S ESR 海右顶销限位 S11

TWISTLOCK UNLOCK PRO.S ER 右端开锁限位 S103

TWISTLOCK LOCK PRO.S ER 右端闭锁限位 S104

Date	Name	ISSUED BY:	DESIGN BY:	DRAW BY: NI WEIJIE	ZPMC 中国	SYSTEM TYPE ZPMC SPREADER	ORDER.NR: 1002000598 / DRAWING.NR:	ELEMENTARY DIAGRAM SPREADER CIRCUIT DIAGRAM	SP / +	SH.NO. 9 / CONT.ON.SH 10

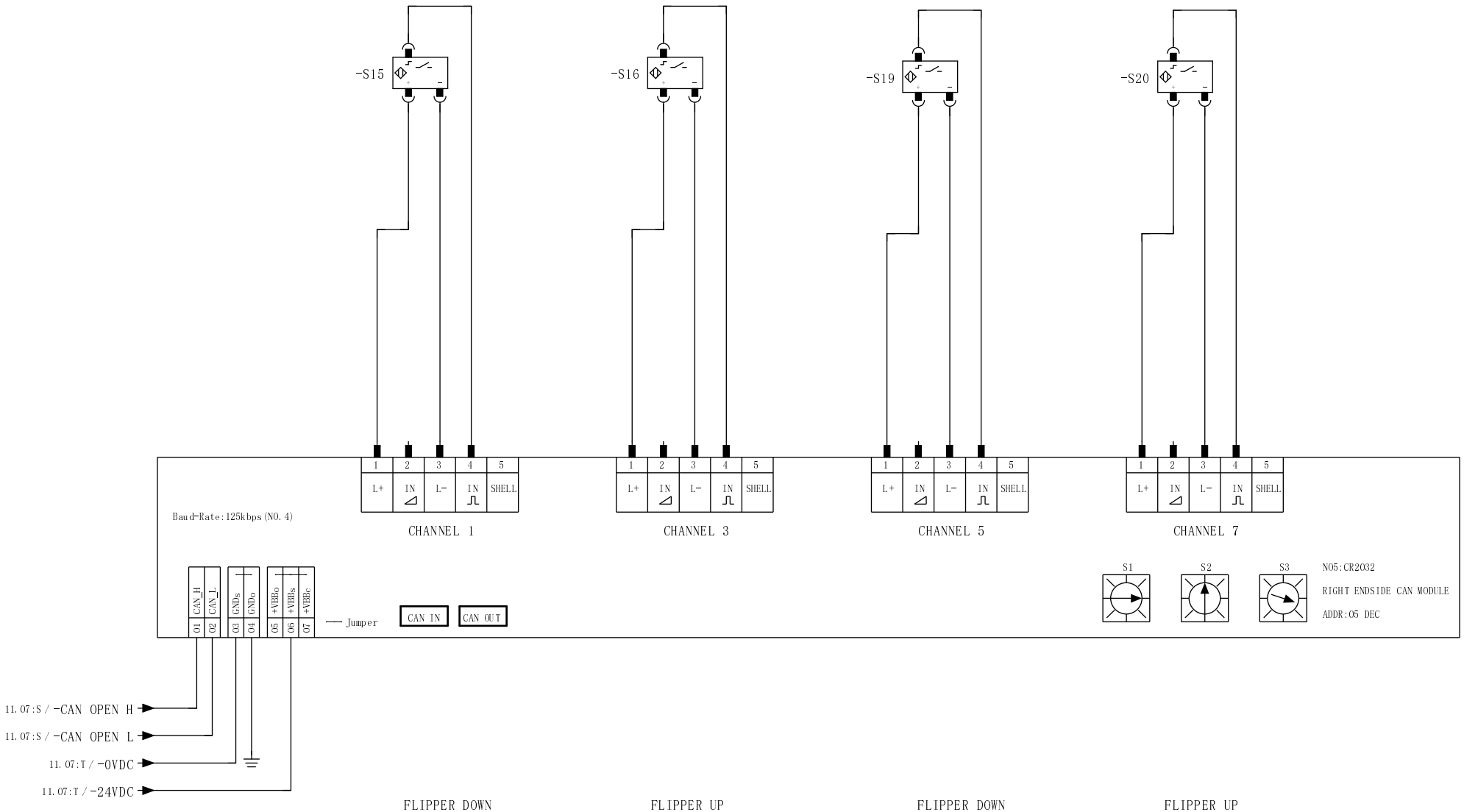

FLIPPER DOWN
PRO.S ELR
陆右侧导板下限位 S15

FLIPPER UP
PRO.S ELR
陆右侧导板上限位 S16

FLIPPER DOWN
PRO.S ESR
海右侧导板下限位 S19

FLIPPER UP
PRO.S ESR
海右侧导板上限位 S20

Date	Name	ISSUED BY:	DESIGN BY:	DRAW BY: NI WEIJIE	ZPMC 中国	SYSTEM TYPE ZPMC SPREADER	ORDER.NR: 1002000598 / DRAWING.NR:	ELEMENTARY DIAGRAM SPREADER CIRCUIT DIAGRAM	SP / +	SH.NO. 10 / CONT.ON.SH 11

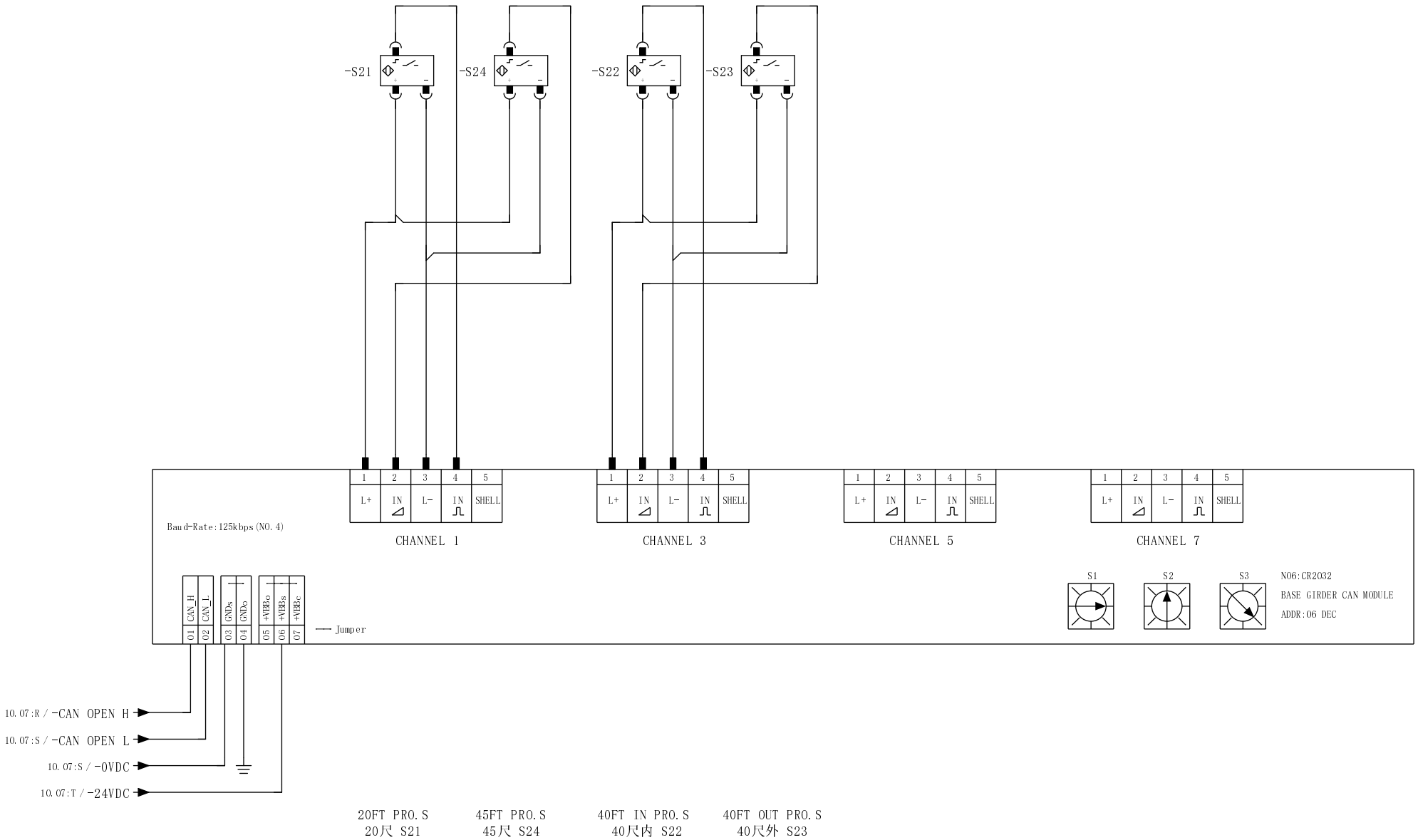

20FT PRO.S
20尺 S21

45FT PRO.S
45尺 S24

40FT IN PRO.S
40尺内 S22

40FT OUT PRO.S
40尺外 S23

Date	Name	ISSUED BY:	DESIGN BY:	DRAW BY: NI WEIJIE	ZPMC 中国	SYSTEM TYPE ZPMC SPREADER	ORDER.NR: 1002000598 / DRAWING.NR:	ELEMENTARY DIAGRAM SPREADER CIRCUIT DIAGRAM	SP / +	SH.NO. 11 / CONT.ON.SH 12

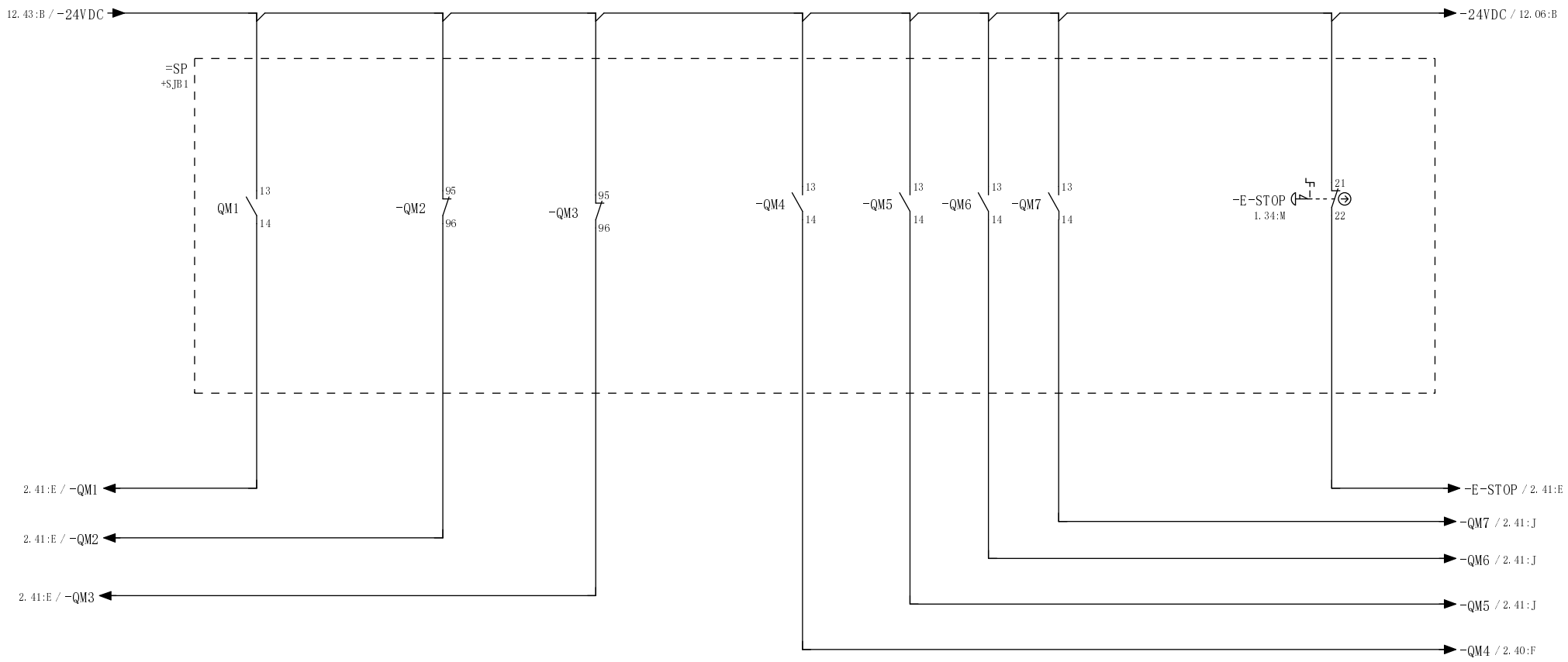

Telescope Motor
Overload Protect
伸缩马达M1过流保护

Left TWL Motor
Overload Protect
左开闭锁马达M2过流保护

Right TWL Motor
Overload Protect
右开闭锁马达M3过流保护

Flipper motor ESL
Overload Protect
海左导板马达M4过流保护

Flipper motor ESR
Overload Protect
海右导板马达M6过流保护

Flipper motor ELL
Overload Protect
陆左导板马达M5过流保护

Flipper motor ELR
Overload Protect
陆右导板马达M7过流保护

Date	Name	ISSUED BY:	DESIGN BY:	DRAW BY: NI WEIJIE	ZPMC 中国	SYSTEM TYPE ZPMC SPREADER	ORDER.NR: 1002000598 / DRAWING.NR:	ELEMENTARY DIAGRAM SPREADER CIRCUIT DIAGRAM	SP / +	SH.NO. 12 / CONT.ON.SH 13

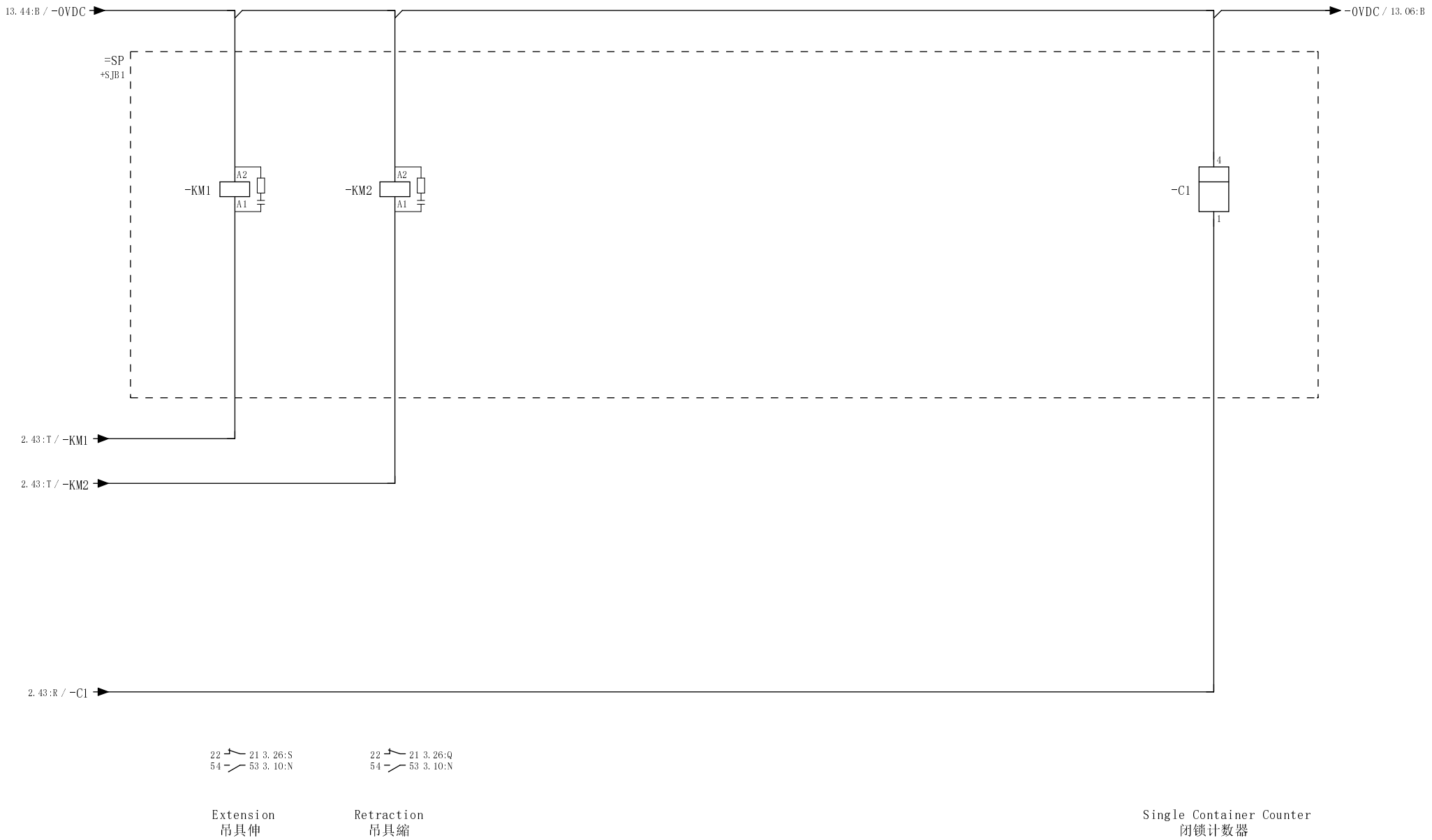

Date	Name	ISSUED BY:	DESIGN BY:	DRAW BY: NI WEIJIE	ZPMC 中 国	SYSTEM TYPE ZPMC SPREADER	ORDER.NR: 1002000598	ELEMENTARY DIAGRAM	SP
							DRAWING.NR:	SPREADER CIRCUIT DIAGRAM	+

SH.NO. 13

CONT.ON.SH 14

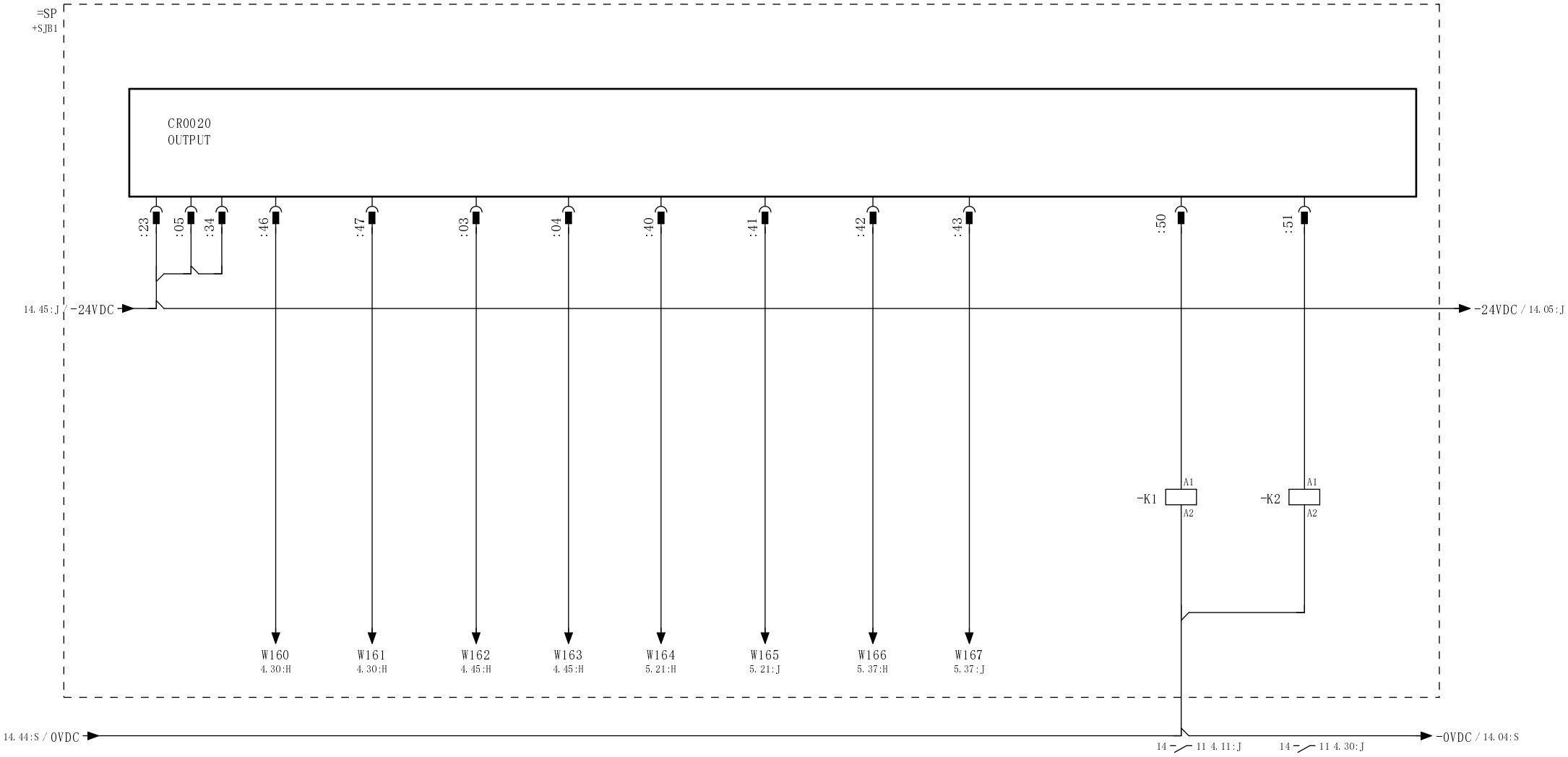

Twistlocks
Left Unlock
左开锁

Twistlocks
Left Lock
左闭锁

Twistlocks
Right Unlock
右开锁

Twistlocks
Right Lock
右闭锁

Flipper ESL Up
海左导板上

Flipper ESL Down
海左导板下

Flipper ELL Up
陆左导板上

Flipper ELL Down
陆左导板下

Twistlocks
Left brake open
左端开闭锁

Twistlocks
Right brake open
右端开闭锁

Date	Name	ISSUED BY:	DESIGN BY:	DRAW BY: NI WEIJIE	ZPMC 中国	SYSTEM TYPE ZPMC SPREADER	ORDER.NR: 1002000598 / DRAWING.NR:	ELEMENTARY DIAGRAM SPREADER CIRCUIT DIAGRAM	SP / +	SH.NO. 14 / CONT. ON. SH 15

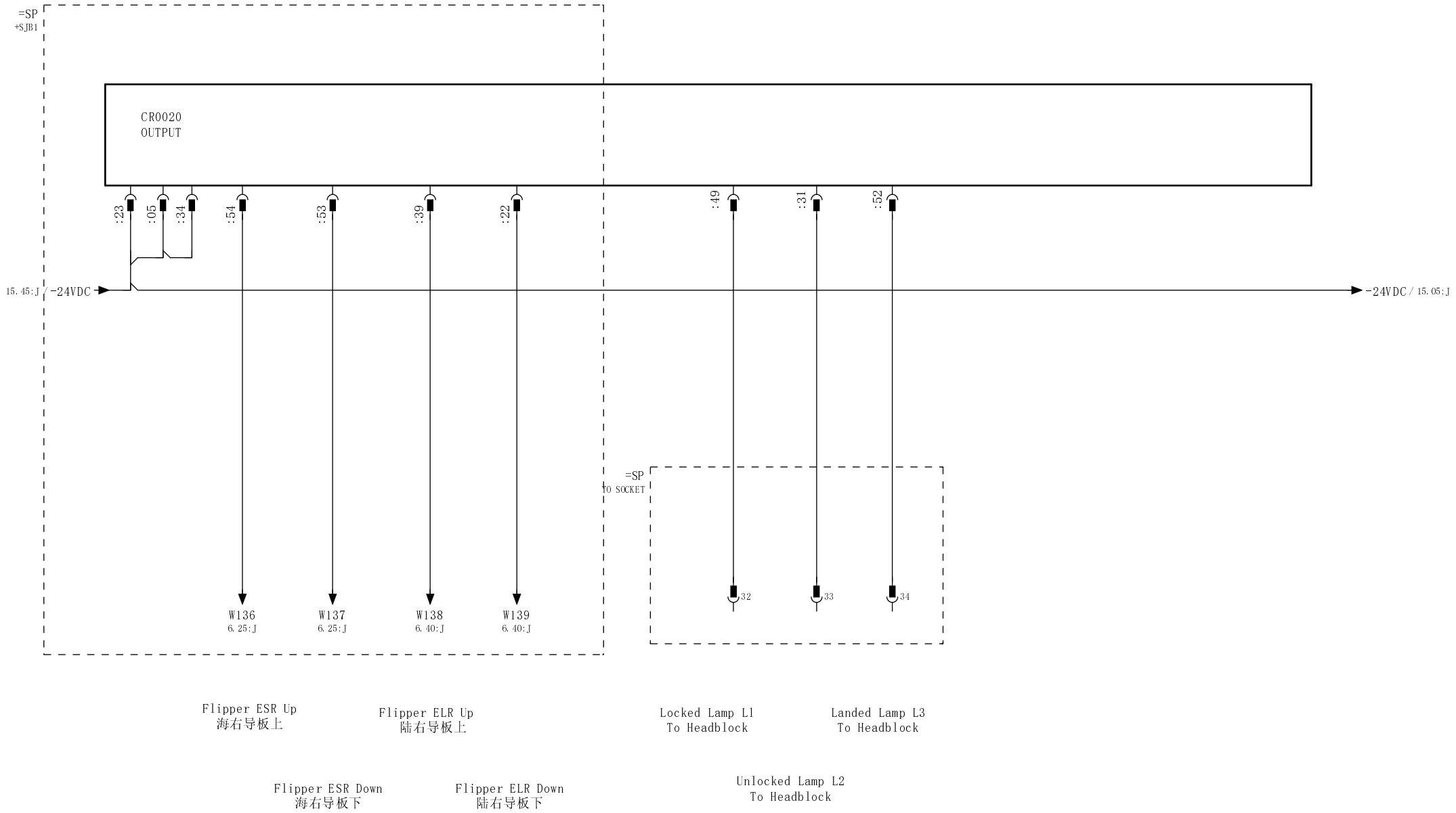

Date	Name	ISSUED BY:	DESIGN BY:	DRAW BY: NI WEIJIE	ZPMC 中国	SYSTEM TYPE ZPMC SPREADER	ORDER.NR: 1002000598 / DRAWING.NR:	ELEMENTARY DIAGRAM SPREADER CIRCUIT DIAGRAM	SP / +	SH.NO. 15 / CONT.ON.SH 16

SPREADER<<<>>>HEADBLOCK

37pins	SPREADER SOCKET	Comment
1	1	spreader motor supply L1
2	2	spreader motor supply L2
3	3	spreader motor supply L3
4	4	spreader motor supply L1
5	5	spreader motor supply L2
6	6	spreader motor supply L3
7	7	spreader control voltage L
8	8	spreader control voltage N
9	9	Spare
10	10	Spare
11	11	heater L
12	12	heater N
13	13	Spare
14	14	spreader cable connected signal
15	15	Spare
16	16	Spare
17	17	Spare
18	18	Spare
19	19	Spare
20	20	spreader CAN +
21	21	spreader CAN -
22	22	Spare
23	23	Spare
24	24	Spare
25	25	Spare
26	26	Spare
27	27	Spare
28	28	Spare
29	29	Spare
30	30	Spare
31	31	Spare
32	32	Locked lamp L1
33	33	Unlocked lamp L2
34	34	Landed lamp L3
35	35	0VDC
36	36	Spare
37	37	PE

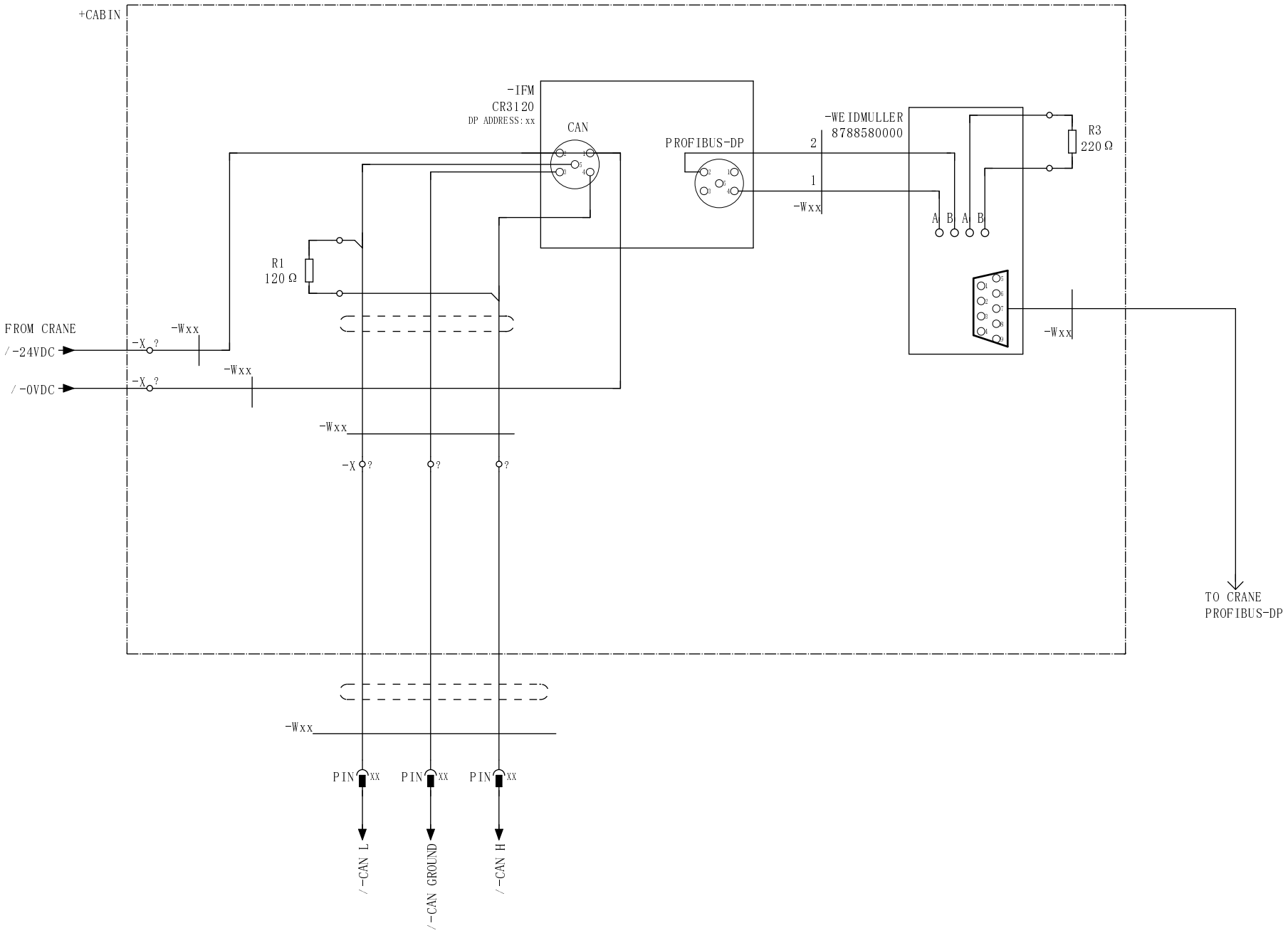

Date	Name	ISSUED BY:	DESIGN BY:	DRAW BY: NI WEIJIE	ZPMC 中国	SYSTEM TYPE ZPMC SPREADER	ORDER.NR: 1002000598	ELEMENTARY DIAGRAM
							DRAWING.NR:	SPREADER CIRCUIT DIAGRAM

SP	SH.NO. 17
+	CONT.ON.SH